Available Reprocessing and Recycling Services for RR SNF
A New IAEA Report

S. Tozser, P. Adelfang, E. Bradley
Research Reactor Section, NEFW/NE-IAEA, Vienna – Austria

M. Budu (Lead editor and editorial coordinator)
SOSNY R&D Company, Moscow – Russian Federation

M. Chiguer
AREVA, Paris La Défense – France

9th Technical Meeting on Lessons Learned from the RRRFR Programme
Samarkand, Uzbekistan, 3-5 June 2015

SOSNY R&D

IAEA
International Atomic Energy Agency

AREVA

Overview

- Introduction
- Content of the IAEA Technical Report “Available Reprocessing and Recycling Services for RR SNF”
- Overview of Included Information
  - RR SNF Management in France and Russia
  - International Agreements and Licensing Summary in France and Russia
  - Managerial and Logistics Support
- Status and Conclusions

IAEA

Introduction

- GTRI: US and Russian origin HEU return to the country where it was originally enriched
  - Participating countries: Argentina, Australia, Austria, Belarus, Belgium, Brazil, Bulgaria, Canada, Chile, Colombia, Czech Republic, Denmark, France, Georgia, Greece, Hungary, Iraq, Israel, Italy, Japan, Kazakhstan, Latvia, Libya, Mexico, Philippines, Poland, Portugal, Romania, Russia, Serbia, Slovenia, South Africa, South Korea, Spain, Sweden, Taiwan, Thailand, Turkey, Ukraine, United Kingdom, United States, Uzbekistan, Vietnam

- IAEA, NEA and OECD continue to support the nuclear community in developing geological repositories
  - Available publications (specific safety requirements, international conferences proceedings, joint research reports, guidelines etc.)

- New IAEA publication *Available Reprocessing and Recycling Services for RR SNF*

  ✓ France and Russia offer these services for foreign RR SNF

IAEA

Content of the IAEA Technical Report (1/6)

- **Chapter 1 Introduction**
  - Background
  - Scope, objective and structure
  - Overview of the back end nuclear fuel cycle solutions and considerations of decision-making

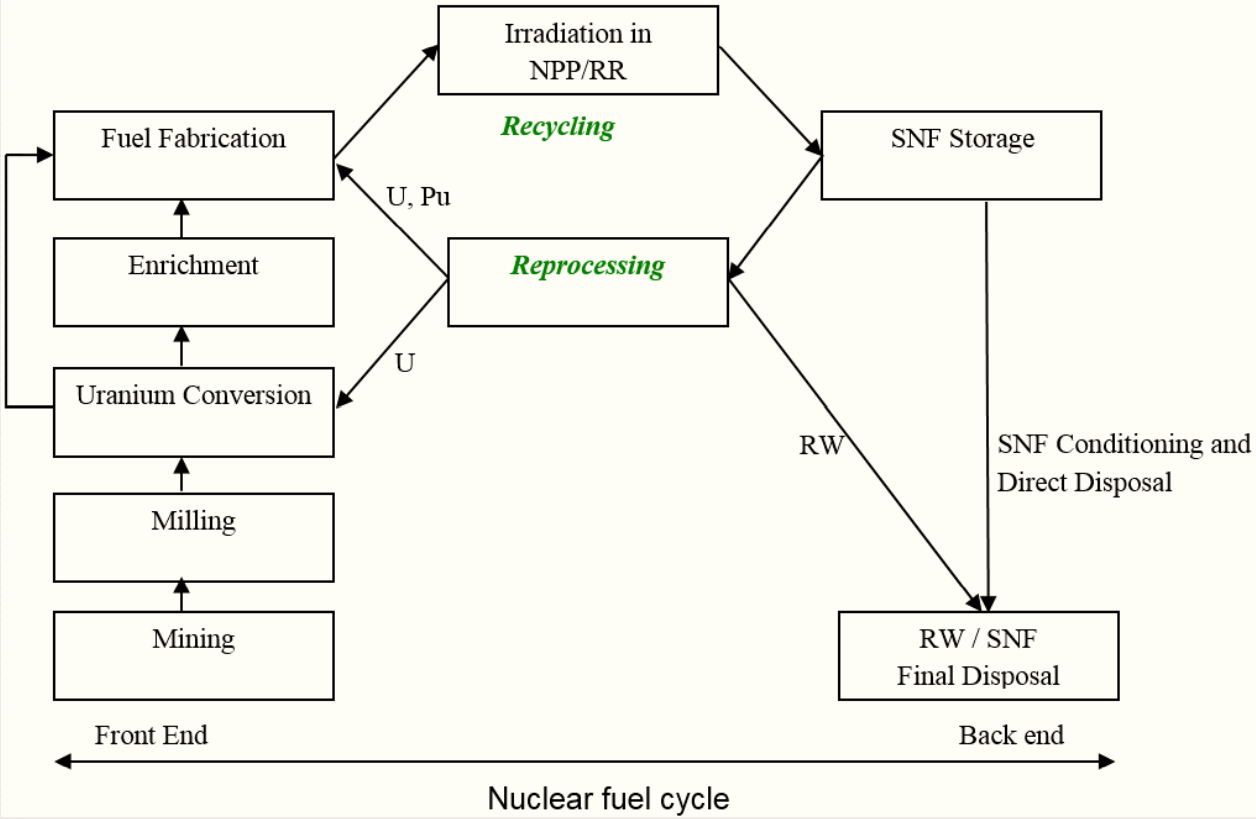

Content of the IAEA Technical Report (2/6)

- **Chapter 2 Country Specific Service Description**
  - France (AREVA) and the Russian Federation (FSUE Mayak PA)
    - ✓ Legislative background
    - ✓ Reprocessing facility
    - ✓ Environmental aspects
    - ✓ Milestones and time frame of a project realization
    - ✓ Cost structure

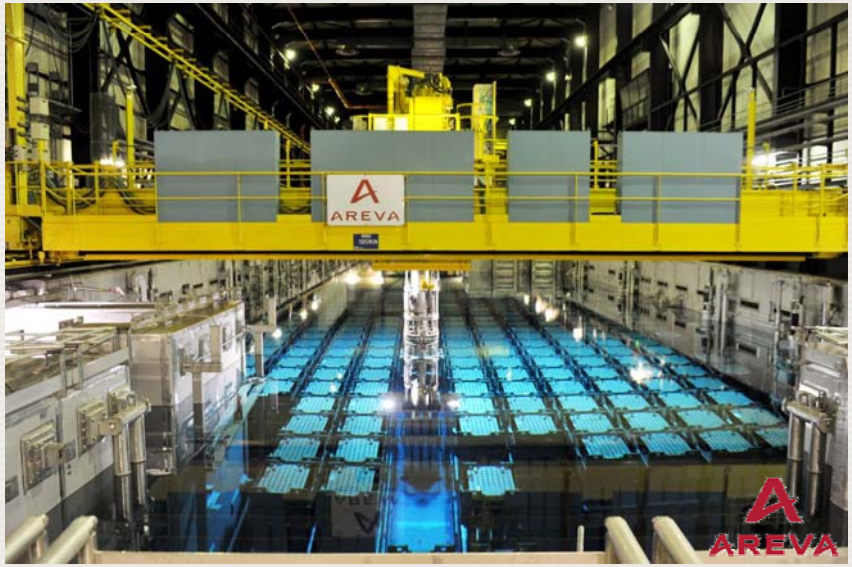

IAEA

Content of the IAEA Technical Report (3/6)

Chapter 3 Managerial and Logistics Support

Technical Resources and Equipment

- Packages available for shipments
- Accessories and support equipment
- Transport modes supported
- Transport selection considerations
- International conventions and agreements
- Shipment coalitions

Engineering Support Services

- Feasibility studies
- Contracting support
- Licensing support
- Support for the RR facility preparation
- Shipment support
  - Support post shipment activities
  - Example of project cost distribution

Examples of Previous Experience

- Summary of US- and Russian-origin HEU RR SNF take-back programmes
- LEU SNF shipments

Engineering Support Providers

- Russia
- France
- Germany
- Czech Republic
- USA

IAEA

Content of the IAEA Technical Report (4/6)

- Chapter 4 Conclusions
- Appendix I: RR SNF Packages Technical Specifications
- Appendix II: Technologies for SFA Loading in Packages
- Appendix III: Draft Service Description Template

Aknowledgements to

IAEA Research Reactor Section Staff
Bradley, E. (Former Head of Section)
Tozser, S.
Marshall, F.
Adelfang, P. (Retired)

IAEA

Content of the IAEA Technical Report (5/6)

Aknowledgements to

CONTRIBUTORS TO DRAFTING AND REVIEW

Arkhangelskiy, N.	State Atomic Energy Corporation ROSATOM, Russian Federation
Baryshnikov, M.	JSC Techsnabexport (TENEX), Russian Federation
Bennet, P.	Institute for Energy Technology, Finland
Bock, H.	TU Atominstitute, Austria
Bolshinsky, I.	Idaho National Laboratory, USA
Budu, M.E. (Lead Editor)	SOSNY R&D Company, Russian Federation
Chiguer, M.	AREVA, France
Derganov, D.	SOSNY R&D Company, Russian Federation
Diegelmann, C.	DAHER - Nuclear Cargo und Service GmbH, Germany
Domingo, X.	AREVA, France
Dorofeev, A.	State Atomic Energy Corporation ROSATOM, Russian Federation
Gusakov-Staniukovitch, I.	JSC Federal Centre for Nuclear and Radiation Safety, Russian Federation
Ivashchenko, A.	SOSNY R&D Company, Russian Federation

IAEA

Content of the IAEA Technical Report (6/6)

Aknowledgements to

CONTRIBUTORS TO DRAFTING AND REVIEW

Ipatov, V.	State Atomic Energy Corporation ROSATOM, Russian Federation
Iyer, N.	Savannah River National Laboratory, USA
Komarov, S.N.	SOSNY R&D Company, Russian Federation
Komarov, S.V.	SOSNY R&D Company, Russian Federation
Laloy, V.	AREVA, France
Lazarev, E.	Volga-Dnepr Airlines, Russian Federation
Leroy, J.-F.	AREVA, France
Mercier, V.	AREVA, France
Naletov, S.	ASPOL-Baltic Group, Russian Federation
Novikov, A.	JSC Federal Centre for Nuclear and Radiation Safety, Russian Federation
Podlaha, J.	ÚJV Řež, a. s., Czech Republic
Svitak, F.	ÚJV Řež, a. s., Czech Republic
Tschiesche, H.	DAHER - Nuclear Cargo und Service GmbH, Germany

IAEA

Overview of Included Information (1/8)

➢ RR SNF Management in France and Russia

AREVA

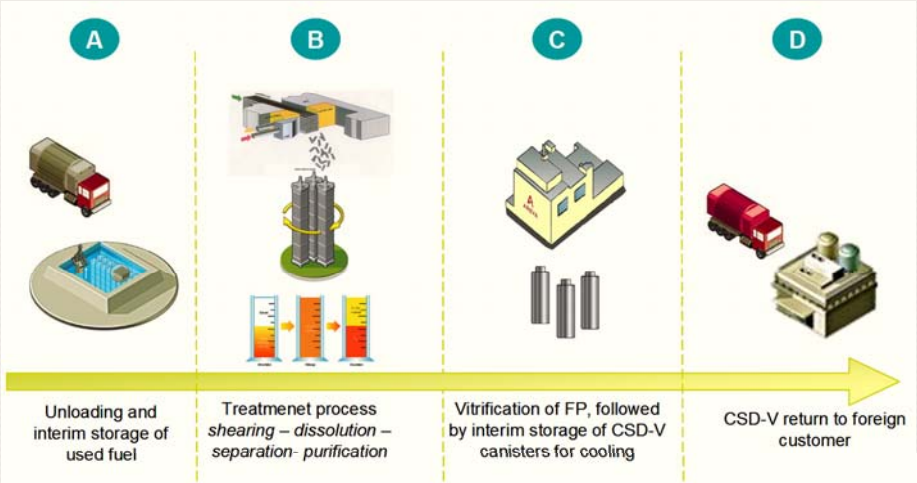

- ✓ New Polyvalent Fuel Treatment Facility (TCP) that will substantially expand the reprocessing spectrum services
- ✓ U-Si reprocessing qualification successful, industrial scale under preparation and licensing.

FSUE Mayak PA

- Features:
  - ✓ Joint reprocessing of different SFAs
  - ✓ Radioisotope separation and production (caesium, strontium, promethium, krypton, neptunium, radioactive iodine etc.)
  - ✓ Commercial output of regenerated uranium
  - ✓ Radioactive waste management

- ✓ Extension of the reprocessed SNF domain (U-Be, U-Zr, uranium metal, plutonium fuels and materials, SNF from molten salt RR etc.)
- ✓ Expansion of the services and products offered on the market (e.g. products for advanced fast reactor fuels)
- ✓ Process equipment upgrade
- ✓ New RW management complex

IAEA

Overview of Included Information (2/8)

➢ International Agreements and Licensing Summary in France

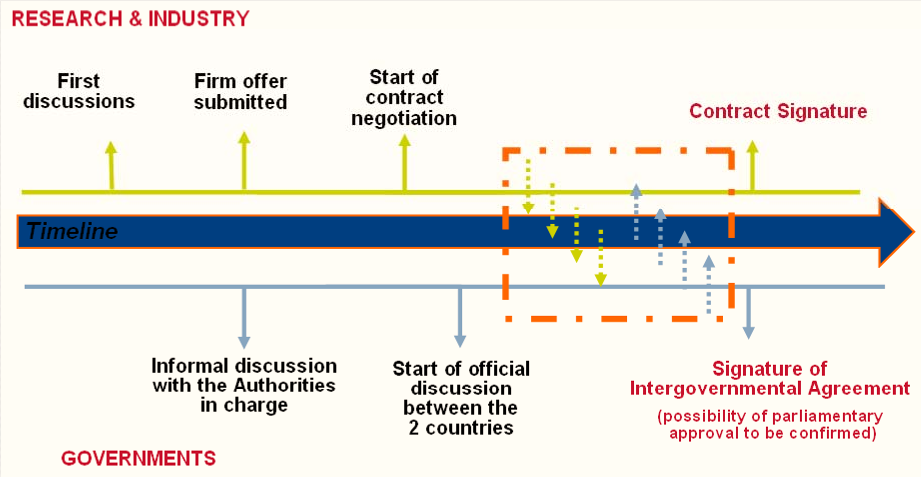

- French Nuclear Safety Authority (ASN)
  - ✓ Certificate of approval for package design
  - ✓ Transportation authorization
  - ✓ Reception-reprocessing authorization at La Hague plant

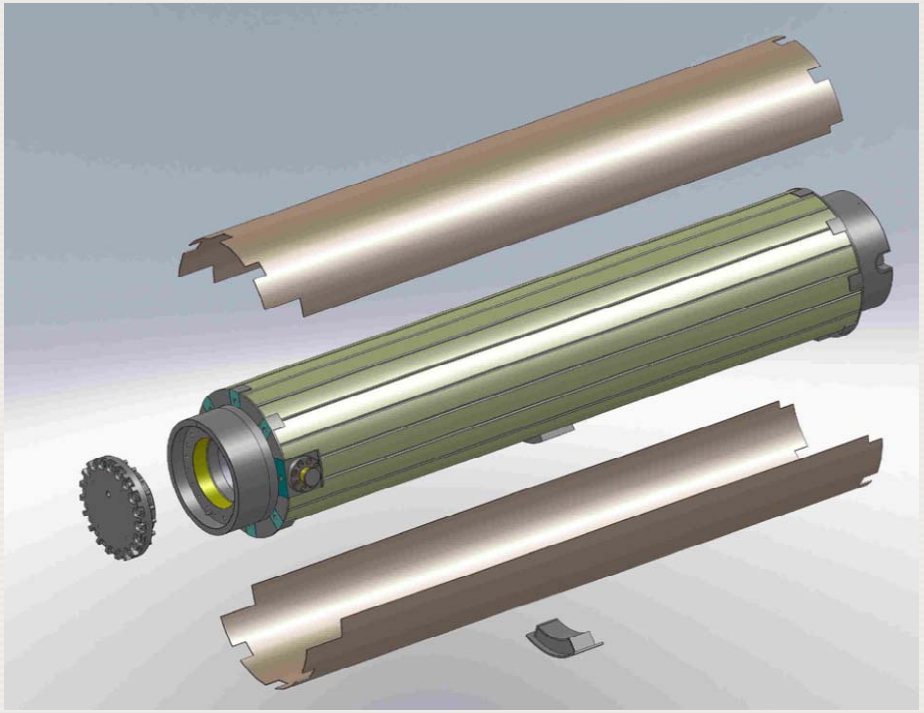

IAEA

Overview of Included Information (3/8)

➢ International Agreements and Licensing Summary in Russia

- Federal Law No. 7-FL "On Environmental Protection":
  - ✓ Government-to-government agreement
    - Two options are possible: RW return to the export country, or permanent disposition in the Russian Federation.
  - ✓ Unified Project (state ecological expertise assessment)
    - Draft FTC, special ecological programs, enhancement of environmental safety

ROSATOM

FCNRS

- State Corporation for Atomic Energy Rosatom
  - ✓ Certificate of approval for package design
  - ✓ Certificate of approval for shipment
- Federal Service for Technical and Export Control of Russia
  - ✓ Import/export license for nuclear commodities and technologies

ROSATOM

FSTEC

IAEA

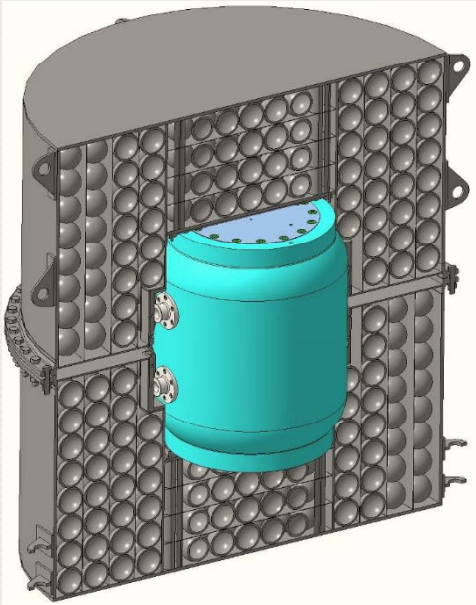

Overview of Included Information (4/8)

➢ Managerial and Logistics Support: Available Packages and Transport Modes

Package	Service Provider	Countries	Mode of Transport
TUK-19	Sosny R&D Company	Russia, Kazakhstan, Latvia, Libya, Poland, Romania, Serbia, Uzbekistan	**Road, Railway, Water, Air**
TUK-145/C	Sosny R&D Company	Russia, Vietnam, Hungary, Uzbekistan	**Road, Railway, Water, Air**
ŠKODA VPVR/M	ÚJV Řež Sosny R&D Company	Russia, Belarus, Bulgaria, Czech Republic, Hungary, Poland, Serbia and Ukraine	**Road, Railway, Water**
Castor MTR2	DAHER – NCS, Sosny R&D Company	Russia, Germany	**Road, Railway, Water**
TUK-128 (TUK-135)	Sosny R&D Company, FSUE Mayak PA	Russia	**Road, Railway**
TUK-32	Sosny R&D Company, FSUE Mayak PA	Russia	**Railway**
TN™MTR-68, 44, RHF	AREVA TN	France, Denmark, Portugal, Italy, Venezuela, Australia, Belgium, USA	**Road, Railway, Water**
TN™MTR-52, 52S, 52SV2	AREVA TN	France, Denmark, Portugal, Australia, USA	**Road, Railway, Water**
TN-LC	AREVA TN	France, USA	**Road, Railway, Water**
TN®17/2	AREVA TN	France, Netherlands, Italy, Sweden, Belgium	**Road, Railway, Water**
NAC-LWT	NAC International	USA, EU, South America, Asia countries	**Road, Railway, Water**

Overview of Included Information (5/8)

- **Managerial and Logistics Support: Types of Engineering Support Available**

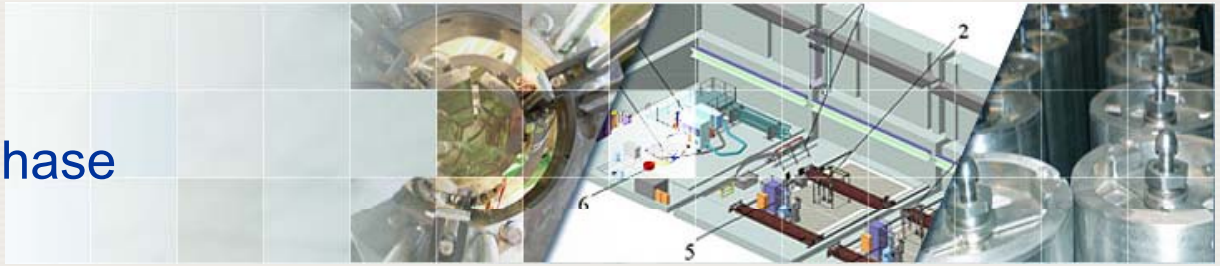

- Decision Preparatory Phase
- Contracting

- Licensing
- RR Facility Preparation

- Shipment
- Post Shipment Activities

IAEA

Overview of Included Information (6/8)

- **Managerial and Logistics Support: French Support Provider**

- International transport
- Design, manufacture and deployment of packaging systems for nuclear material
- SNF management: reprocessing and recycling, engineering work in developing waste storage and disposal equipment and facilities
- U.S. FRRFR Program

IAEA

Overview of Included Information (7/8)

- **Managerial and Logistics Support: Russian Support Providers**

- Development and supply of equipment for NPPs, RRs, subcritical assemblies, nuclear fuel cycle facilities and RW management facilities
- Research and engineering services involving handling of nuclear materials and radioactive substances, transportation of nuclear materials and radioactive substances
- Development and certification of conveyances and packages
- RRRFR Program (financed by U.S. DOE)

IAEA

ASPOL Baltic

VOLGA-DNEPR AIRLINES

Волга Днепр

Overview of Included Information (8/8)

- **Managerial and Logistics Support: Other Available Support Providers**

- Czech Republic

- Germany

- USA

Status and Conclusions

- The preparation and editorial phase of the IAEA Technical Report "Available Reprocessing and Recycling Options for Research Reactor Spent Nuclear Fuel" ended, and is now following the publication procedure within the IAEA.

- The upcoming IAEA Technical Report "Available Reprocessing and Recycling Options for Research Reactor Spent Nuclear Fuel" offers a comprehensive description of services available, at the time of writing, for reprocessing and recycling RR SNF. The presented existing experience, service providers available to develop feasibility studies and available technologies that can serve as models form a complete knowledge basis for the assessment of the potential project technical specificities, risks, time frame, and budget estimations at the initial phase of planning and decision-making.

IAEA

Thank you for your attention!

S.Tozser@iaea.org
F.Marshall@iaea.org
madalina@msk.sosny.ru
mustapha.chiquer@areva.com

IAEA

SOSNY R&D

AREVA